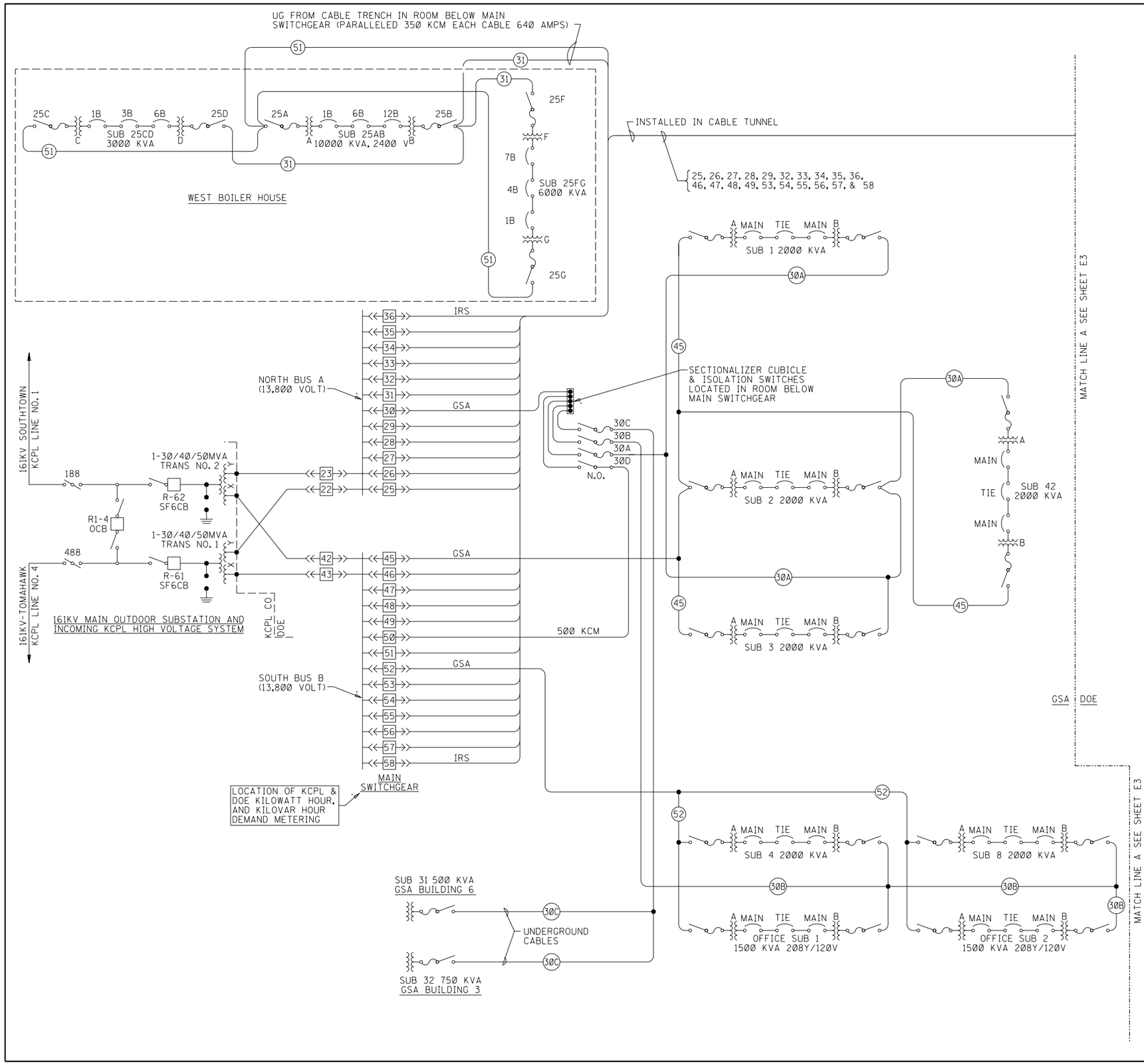

NOTES:

1. ALL TRANSFORMER SECONDARIES ARE 480Y/277V, 3ø, 4W EXCEPT WHERE NOTED.
2. ALL PRIMARY SWITCHES ARE NORMALLY CLOSED EXCEPT WHERE NOTED "NO" (NORMALLY OPEN).
3. LOCATION OF SUBSTATION LETTER I.E. "A", "B" OR SUBSTATION NO. INDICATES FRONT OF SWITCHGEAR. (EXCEPT FACTORY SUBS 1-4).
4. ALL TRANSFORMER TAPS ARE SET AT 100% EXCEPT AS FOLLOWS:
   TRANSFORMER 36A-102½%
   TRANSFORMER 36B-102½%
5. IRS 15KV TIE BREAKER #6 IS INTERLOCKED WITH MAIN BREAKERS #3 AND #7 TO PREVENT PARALLELING OF CABLES 36 AND 58.
6. DO NOT SHUT DOWN SUBS 14 AND 12 TOGETHER (METASYS).

Exhibit 15

Honeywell — UNITED STATES DEPARTMENT OF ENERGY — KCP Kansas City Plant	Facility Engineering Services — K C P, L L C	ENGINEER: T. SCHELP DRAWN BY: S. PILLEY DATE: 6/17/05
TITLE: **Replace Main Switchgear Electrical One-Line KCP, Site**		REF. NO.: K59 SKETCH NO.: **E1**

10/3/2005 T:\Facilities\Proj_Auth\K59 _Repl Main Switchgear_FIRP\elec\K59_E01.dgn