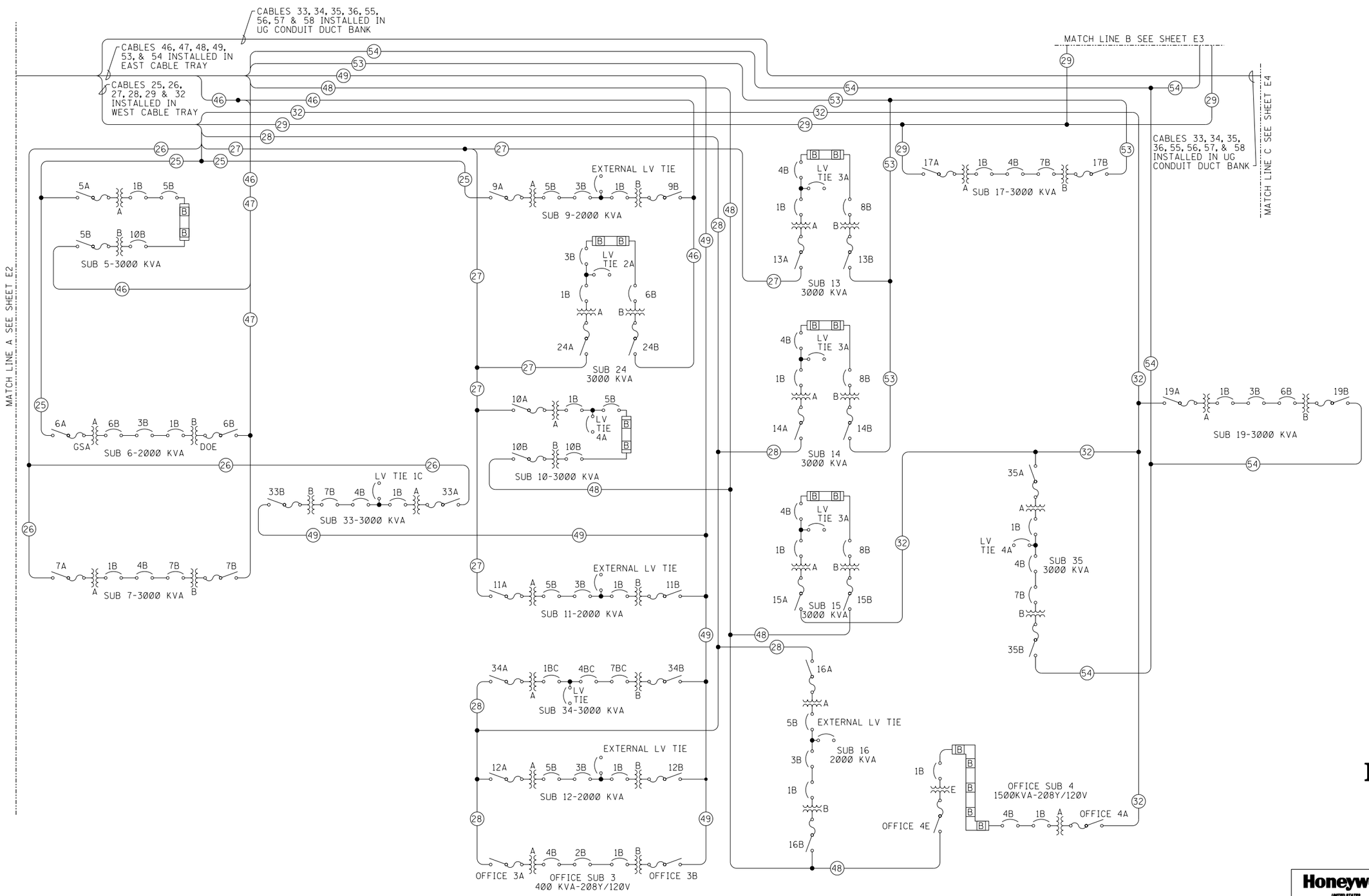

Exhibit 16

Honeywell — UNITED STATES DEPARTMENT OF ENERGY — KCP Kansas City Plant	Facility Engineering Services — K C P. L L C	ENGINEER: T. SCHELP
		DRAWN BY: S. PILLEY
		DATE: 6/17/05
TITLE: **Replace Main Switchgear Electrical One-Line KCP, Site**		REF. NO.: K59
		SKETCH NO.: **E2**